Sold to
info@lesphotography.com.au

MORNING CHORES

12′ x 6′

CHICKEN COOP

Step by Step Building Instructions

© MORNINGCHORES.com | All Rights Reserved

DISCLAIMER

This chicken coop plan is made to help DIY-er. All information / advice is free to use. While MorningChores.com uses reasonable efforts to include accurate information on this document, it makes no representation as to the accuracy, timeliness, or completeness of the information. The content through this document are provided "As-Is"

MorningChores.com and individuals associated with the document through ownership and contribution assumes no liability or responsibility for any errors or omissions in the content contained in this document and will not accept any liability for any loss, damage, injury, or negligence, direct or indirect from use of the information / advice in this document.

All users of information / advice contained within this document should have all work checked / tested by a professional qualified trades person where applicable. Use of the information / advice in this document is at your own risk.

COPYRIGHT

The content of this document (including but not limited to graphics, text, and arrangement) are owned unless otherwise noted by MorningChores.com and no part of this document may be reproduced without written permission of the owners. Information within this document may be stored on computer or printed for personal use only, not for presentation or publication.

GENERAL MATERIAL LIST

Description	Length	Qty.
BOTTOM FRAME		
4" x 4" beam	5'- 4"	4
4" x 4" beam	4'- 4"	2
7" x 10" beam	7'-10"	2
90 degree bracket	5"x5"	8
COOP FLOORING		
5 1/2" x 2" beam	5'- 8"	1
5 1/2" x 2" beam	6'- 0"	2
5 1/2" x 2" beam	3'-8"	2
4" x 2" beam	2'-6 3/8"	4
4" x 2" beam	1'- 5 1/2"	4
3/4" sheet of chipboard 6'- 0" x 4'-0"		1
Linoleum 6'- 0" x 4'-0"		1
COOP FRAME		
1 1/2" x 2 1/2" beam	5'- 7"	4
1 1/2" x 2 1/2" beam	6'- 9 11/16"	1
1 1/2" x 2 1/2" beam	2'- 4 7/16"	14
1 1/2" x 2 1/2" beam	6'- 1/2"	4
1 1/2" x 2 1/2" beam	8'- 1/16"	2
1 1/2" x 2 1/2" beam	1'- 9 7/8"	10
1 1/2" x 2 1/2" beam	5'- 7"	2
NEST BOX FRAME		
1 1/2" x 1 1/2" beam	1'- 4 3/8"	12
1 1/2" x 1 1/2" beam	1'- 2 3/4"	7
1 1/2" x 1 1/2" beam	1'- 1 1/4"	5
1 1/2" x 1 1/2" beam	1'- 5 11/16"	11
1 1/2" x 1 1/2" beam	5'- 9"	3
NEST BOX DETAILS		
3/4" sheet of chipboard 3'- 0" x 1'-4 1/4"		1
1" x 1 9/16" beam	7'- 1/8"	2
3/4" x 3/4" beam	1'- 3/16"	8
3/4" sheet of chipboard 1'- 7/8" x 1'-1 1/4"		5
3/4" x 3/4" beam	9"	8
3/4" x 3/4" beam	1'- 1 1/4"	8
1" x 1 9/16" beam	1'- 5 7/8"	2
1" x 1 9/16" beam	7'- 3 7/8"	2
3/4" sheet of chipboard 10'- 3/16" x 1'- 6-0"		1
SMALL RUN ZONE FRAME		
2" x 2" beam	2'- 2"	4
3 1/2" x 2" beam	1'- 9"	8
3 1/2" x 2" beam	1'- 5 1/2"	7

GENERAL MATERIAL LIST

Description	Length	Qty.
SMALL RUN ZONE FENCING		
Hardware cloth 3'- 8 13/16"x 1'-2 1/8"		2
Hardware cloth 2'- 3 3/16"x 1'-2 5/16"		2
1/2" x 1" beam	3'- 10"	2
1/2" x 1" beam	2'- 2"	4
1/2" x 1" beam	1'- 1 1/2"	6
1/2" x 1" beam	1'- 3 1/2"	4
Metal handle 5 1/2"		2
Metal hinge 2"		6
ROOST LADDER AND NEST BOX DRAWERS		
3/4" sheet of chipboard 1'- 4 1/4" x 1'-3 1/8"		1
1/2" x 2" beam	4'- 10 1/2"	2
2 5/16" x 3/4" beam	1'- 3 1/2"	2
d=7/8 beam	1'- 1 15/16"	6
2 5/16" x 3/4" beam	1'- 3 1/8"	1
2 5/16" x 3/4" beam	2'- 7 7/16"	4
1 1/8" x 2 1/2" beam	2'- 3/16"	2
COOP WALLS		
4" x 2" beam	6'- 0"	6
4" x 2" beam	6'- 1/2"	12
4" x 2" beam	4'- 1/2"	24
COOP WALL EXTERIOR		
1/2" x 1 1/4" beam	6'- 1/2"	1
1/2" x 2" beam	2'- 1 5/16"	2
1/2" x 2" beam	1'- 2 7/8"	2
1/2" x 2" beam	1'- 3 3/8"	2
1/2" x 2" beam	3'- 6"	2
1/2" x 2" beam	1'- 1 3/8"	2
1/2" x 2" beam	2'- 2 13/16"	2
3/4" x 1/2" beam	1'- 1 1/2"	2
3/4" x 1/2" beam	1'- 1 1/2"	1
3/4" x 1/2" beam	3'- 4 3/16"	1
NEST BOX DOOR AND ROOF		
Shingles	17/8 ft2	
3/4" sheet of chipboard 6'- 2" x 1'-5 5/		1
3/4" sheet of chipboard 5'- 8 1/2" x 10'-13/16"		1
1/2" x 1 1/4" beam	5'- 8 1/2"	2
1/2" x 1 1/4" beam	8 5/16"	5
Metal handle 5 1/2"		2
Metal lock		2

GENERAL MATERIAL LIST

Description	Length	Qty.
COOP DOORS AND VENTILATION		
3/4" sheet of chipboard 1'- 8 1/4" x 2'-4 7/16"		2
3/4" sheet of chipboard 1'- 4 1/4" x 11 3/16"		2
1/2" x 2" beam	2'- 1/4"	4
1/2" x 2" beam	2'- 4 7/16"	4
1/2" x 1" beam	5"	4
1/2" x 2" beam	1'- 4 1/4"	6
3/4" sheet of chipboard 8 11/16" x 5"		2
1/2" x 2" beam	2'- 4 7/16"	6
Metal handle 5 1/2"		2
Metal bracket 4"		4
Metal bracket 2"		4
Metal lock		1
ROOF STRUCTURE		
Shingles	25 ft2	
3/4" sheet of chipboard 6'- 8" x 1'-10 3/16"		2
1 1/2" x 1/2" beam	1'- 10 5/8"	4
RUN ZONE STRUCTURE		
4" x 2" beam	1'- 9 5/16"	12
4" x 2" beam	8'- 1 5/16"	12
4" x 2" beam	5'- 8 3/4"	1
4" x 2" beam	3'- 10 5/8"	2
4" x 2" beam	3'- 6 1/2"	2
4" x 2" beam	3'- 2 7/16"	4
CHICKEN DOOR AND LADDER		
3/4" sheet of chipboard 1'- 3" x 1'- 3/4"		1
3/4" sheet of chipboard 5'- 3 7/8" x 1'- 2 1/4"		1
1 11/16" x 1 1/2" beam	2'- 9 9/16"	2
3/8" x 1 15/16" beam	1'- 3/4"	2
3/8" x 1 15/16" beam	1'- 2 1/4"	10

GENERAL MATERIAL LIST

Description	Length	Qty.
RUN ZONE FENCING AND DOORS		
2" x 1/2" beam	2'- 7 7/16"	2
4" x 2" beam	8'- 1 5/16"	12
1/2" x 2" beam	4'- 3 1/16"	4
1/2" x 2" beam	3'- 10 7/8"	2
1/2" x 2" beam	2'-3"	4
1/2" x 1" beam	4'-7 3/8"	2
1/2" x 1" beam	3'-2 5/16"	2
1/2" x 1" beam	7'-11 1/2"	4
1/2" x 1" beam	3'-6 3/16"	2
1/2" x 1" beam	3'-10 1/16"	2
Metal handle 5 1/2"		2
Metal bracket		4
Metal lock		2
Hardware cloth 8′-3/4″ x 5′-10″		1
Hardware cloth 4′-6 5/8″ x 3′-11 15/16″		2
Hardware cloth 3′-11 15/16″ x 2′-4 3/4″		2

BASIC OVERVIEW AND DIMENSIONS

1:42

FRONT

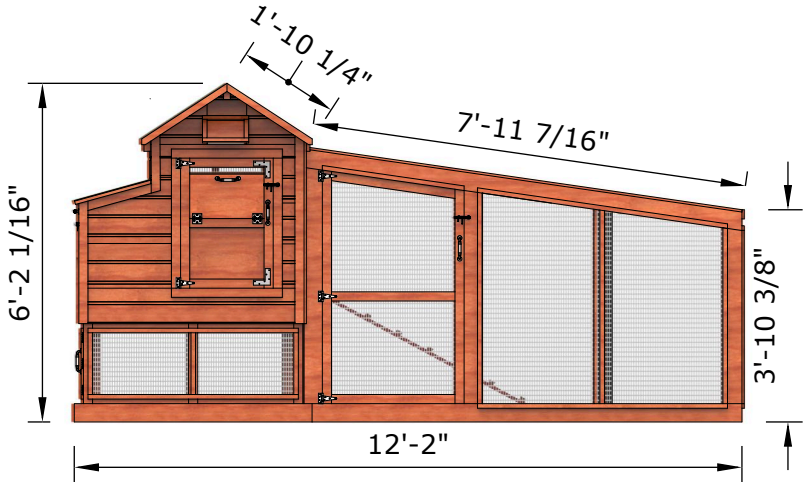

RIGHT

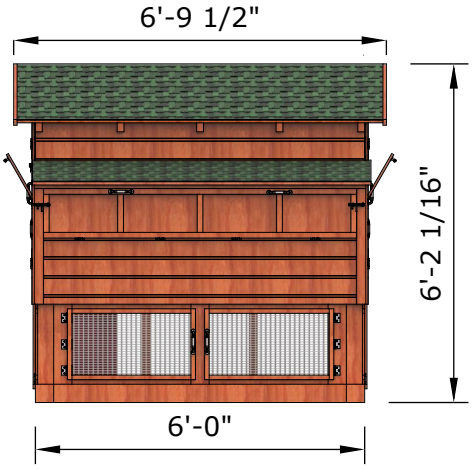

BACK

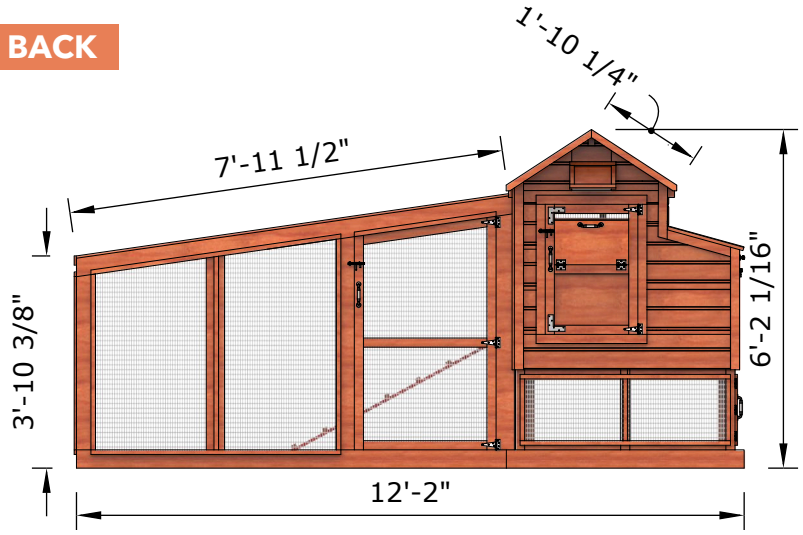

LEFT

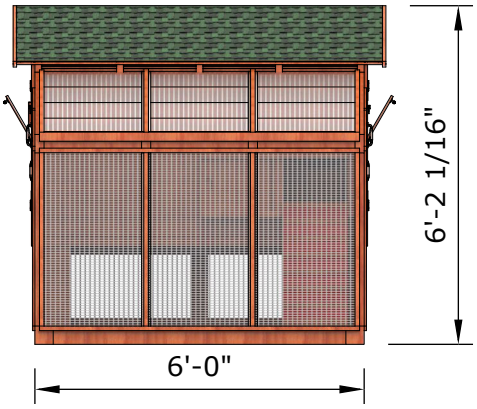

TOP

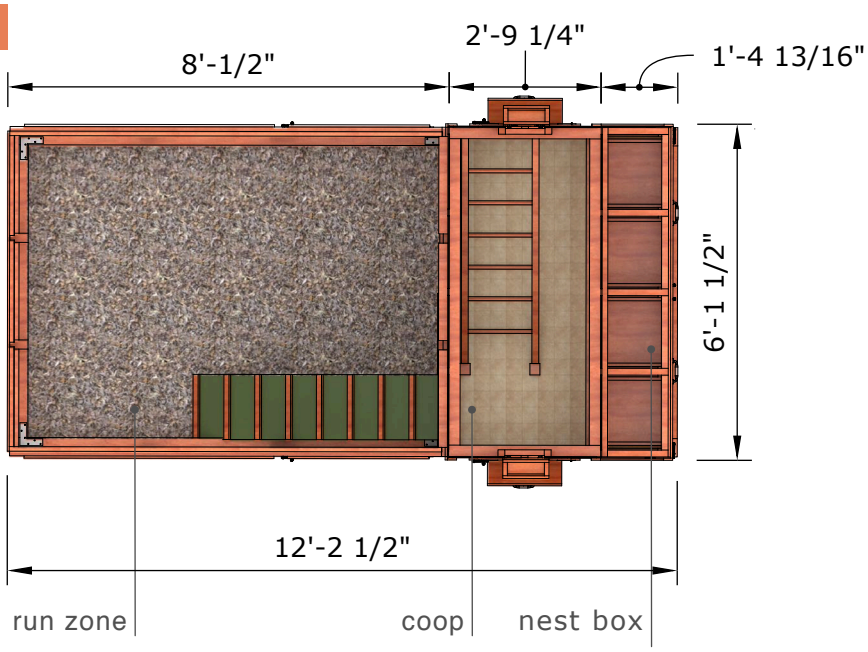

1 BOTTOM FRAME

At ground level, place beams with the sizes of 5'-4"x4"x4", 4'-4"x4", 7'-10"x4" according to the image below and attach them together with the brackets.

1:20

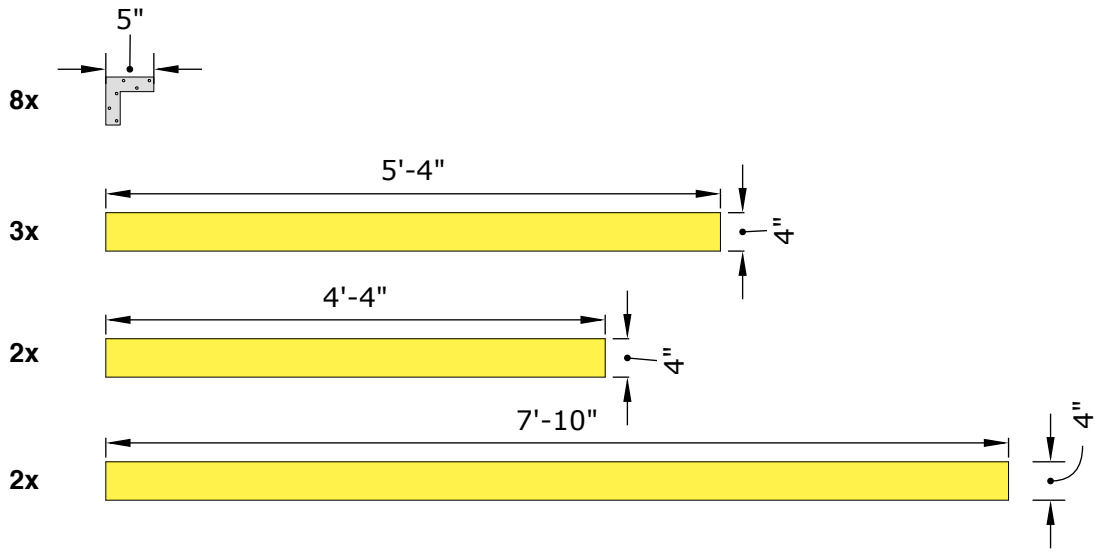

1:28

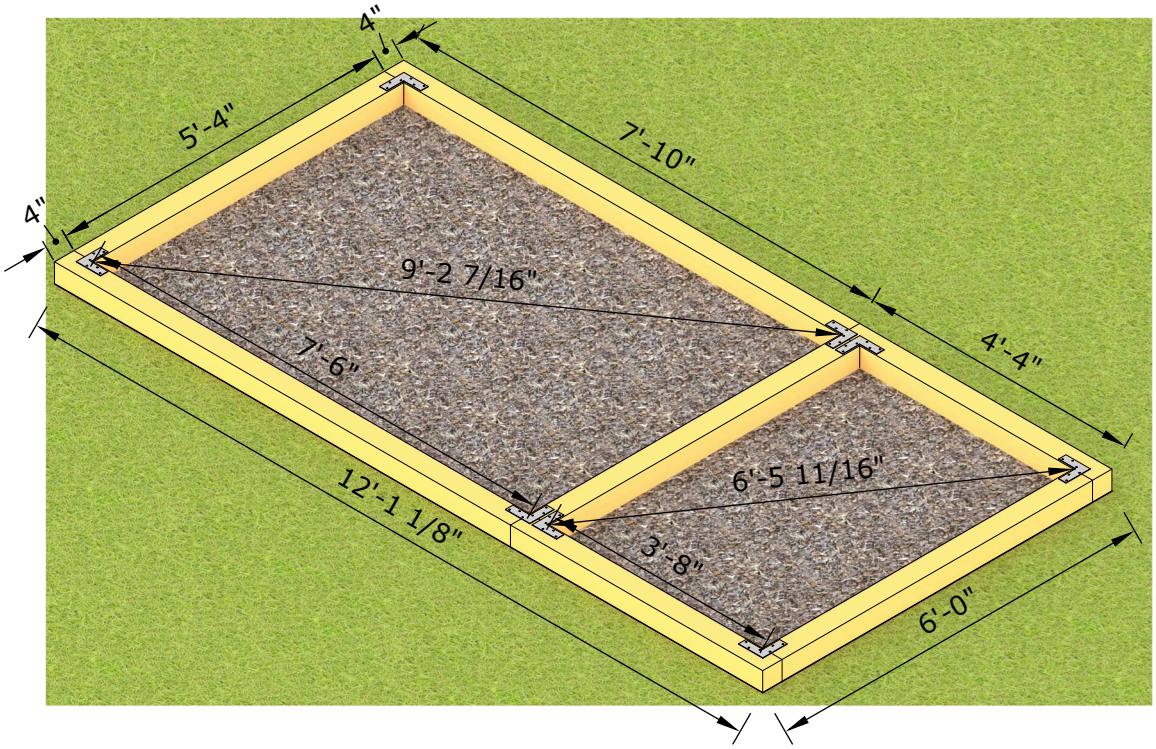

2 COOP ZONE FLOORING

Build a frame to lift the elevation of the coop zone with 5 1/2"x2" beams and nail them together. Then attach the fiberboard sheet with 3/4 thickness and the size of 6'-0"x4'-0", cover with linoleum.

1:30

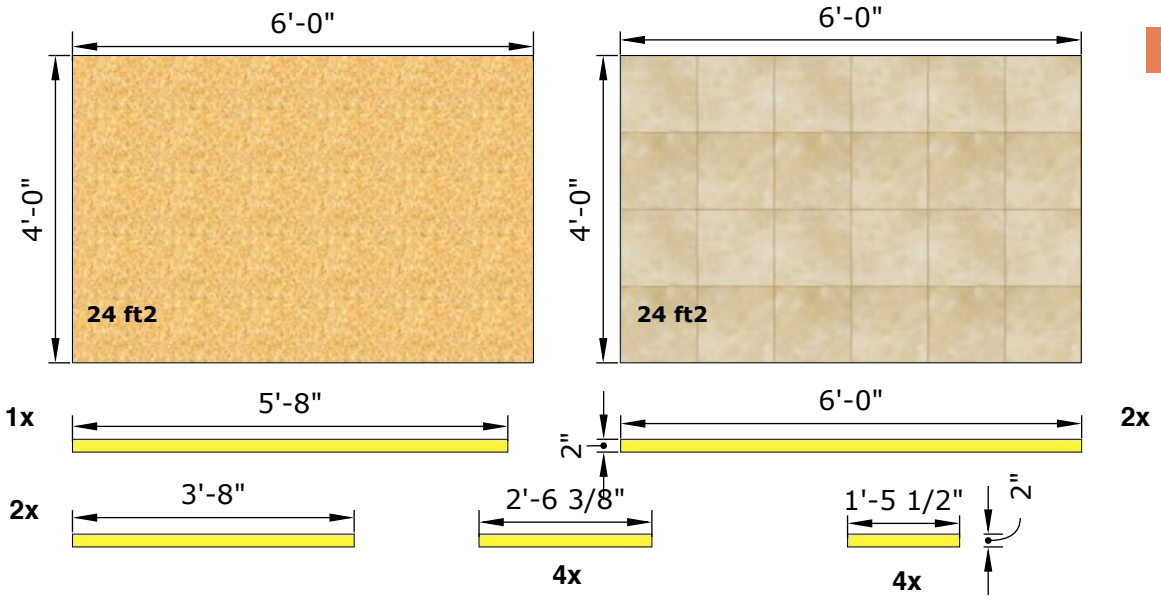

1:28

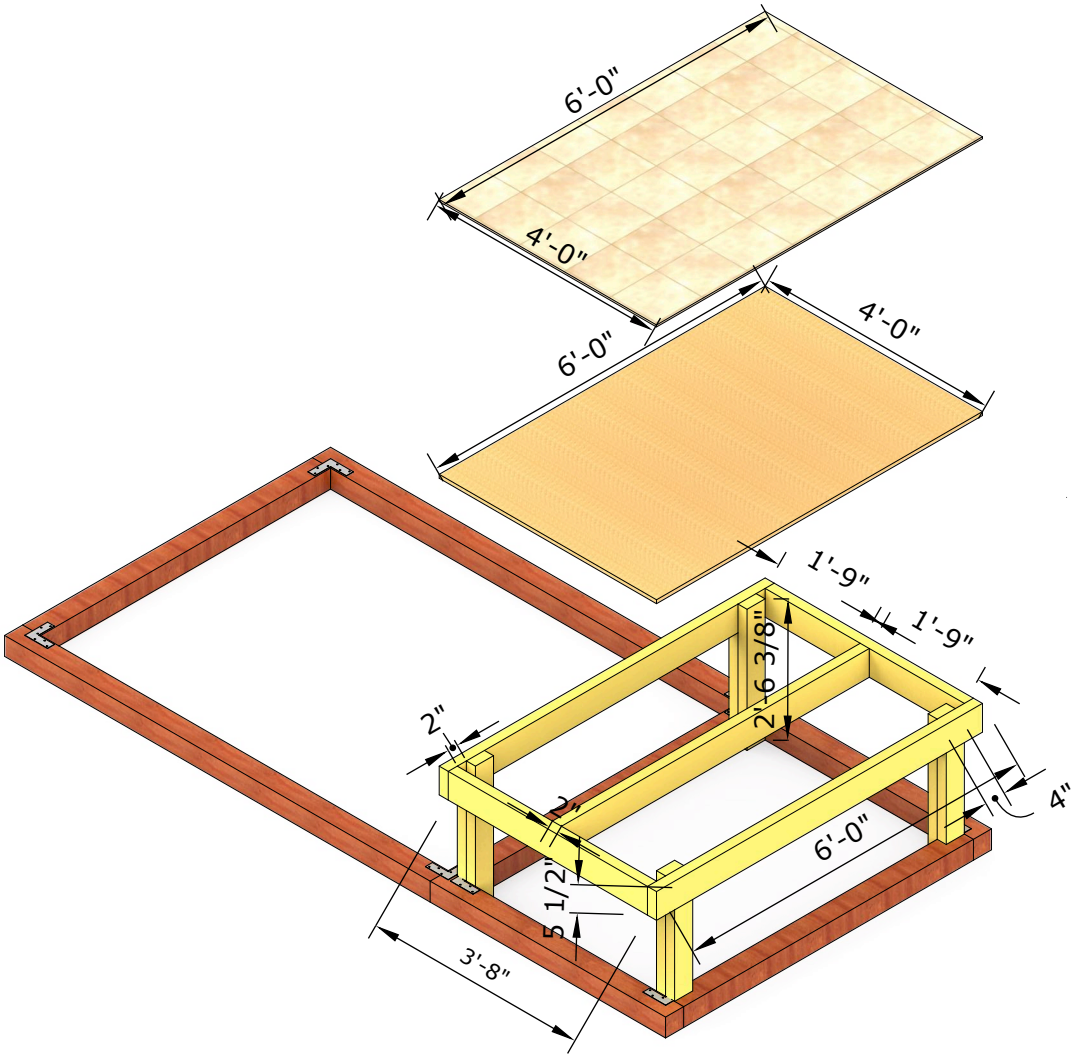

3 COOP FRAME

Prepare all the cuts on the picture below and use it to build the main frame for the coop. This step may look complicated due to the number of materials used, but it's actually quite straightforward.

1:20

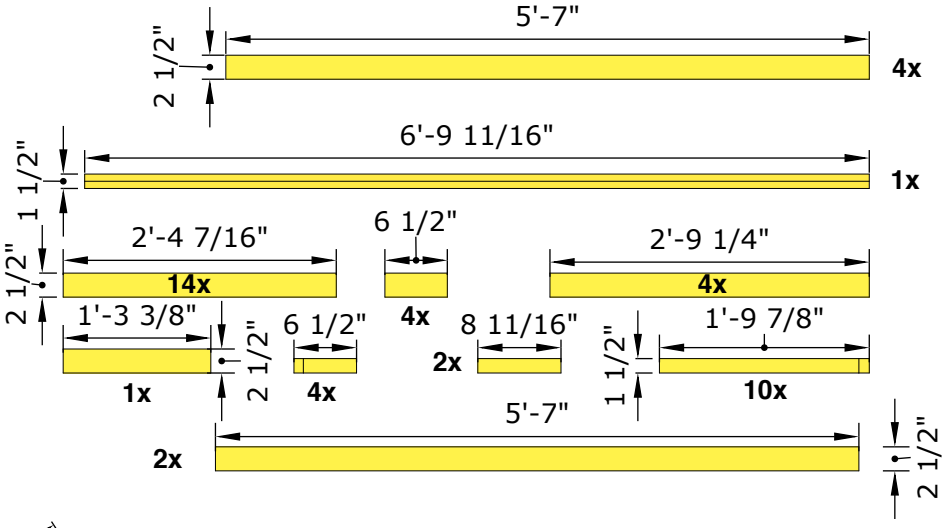

1:16

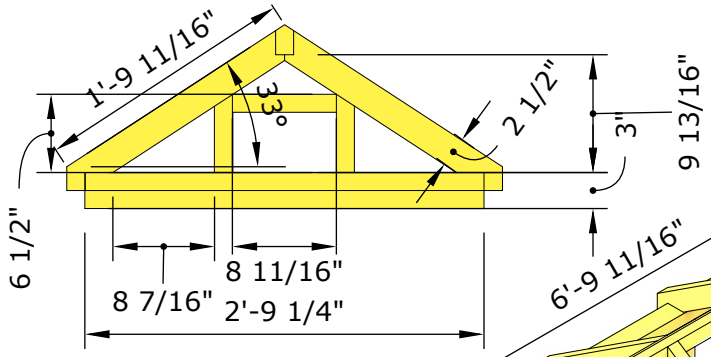

1:20

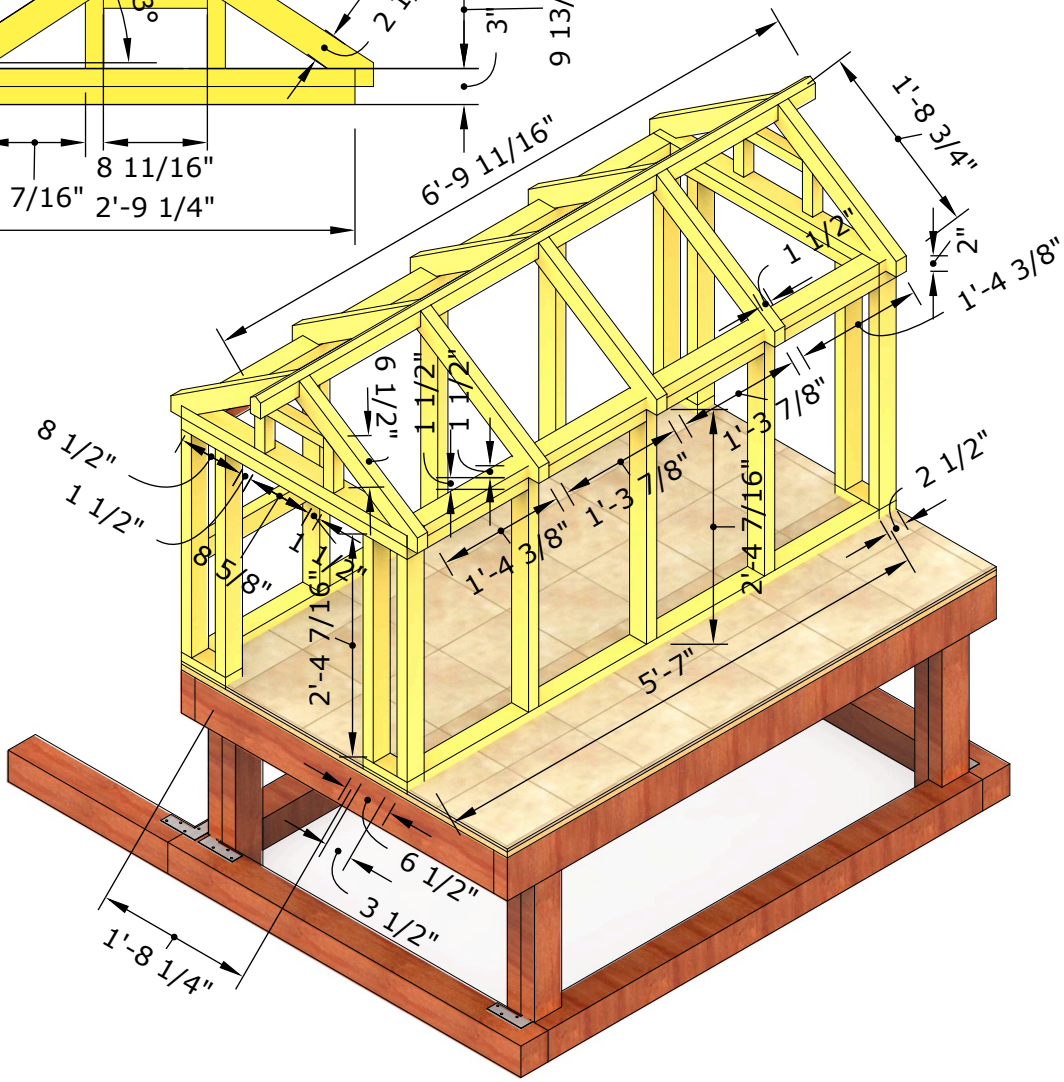

4 NEST BOX FRAME

The size of lumbers for the nest boxes are 1 1/2"x 1 1/2" with various length as pictured below. After you prepared all the cuts, build the frame and nail them together.

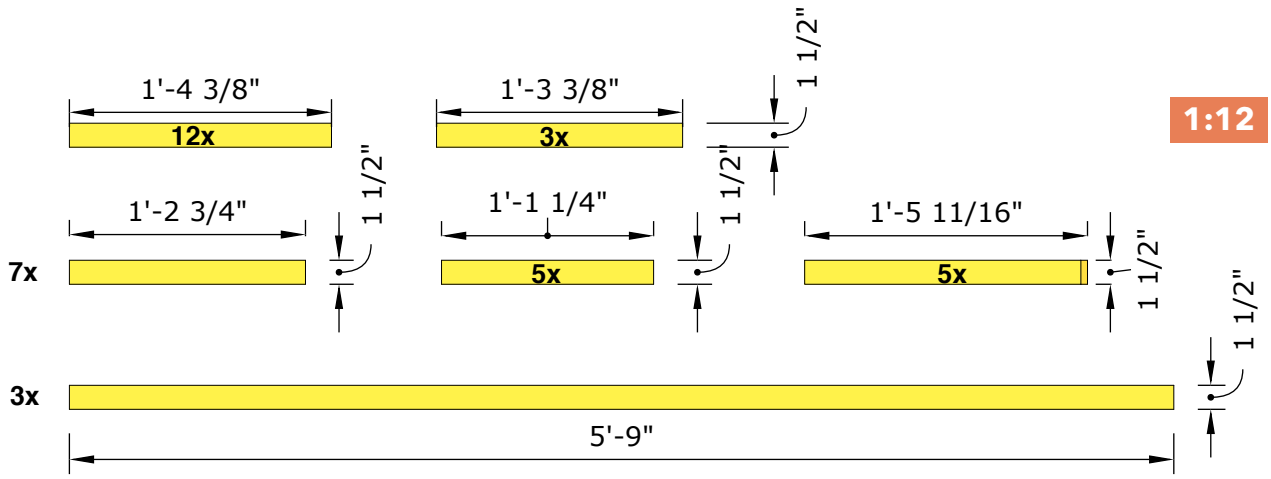

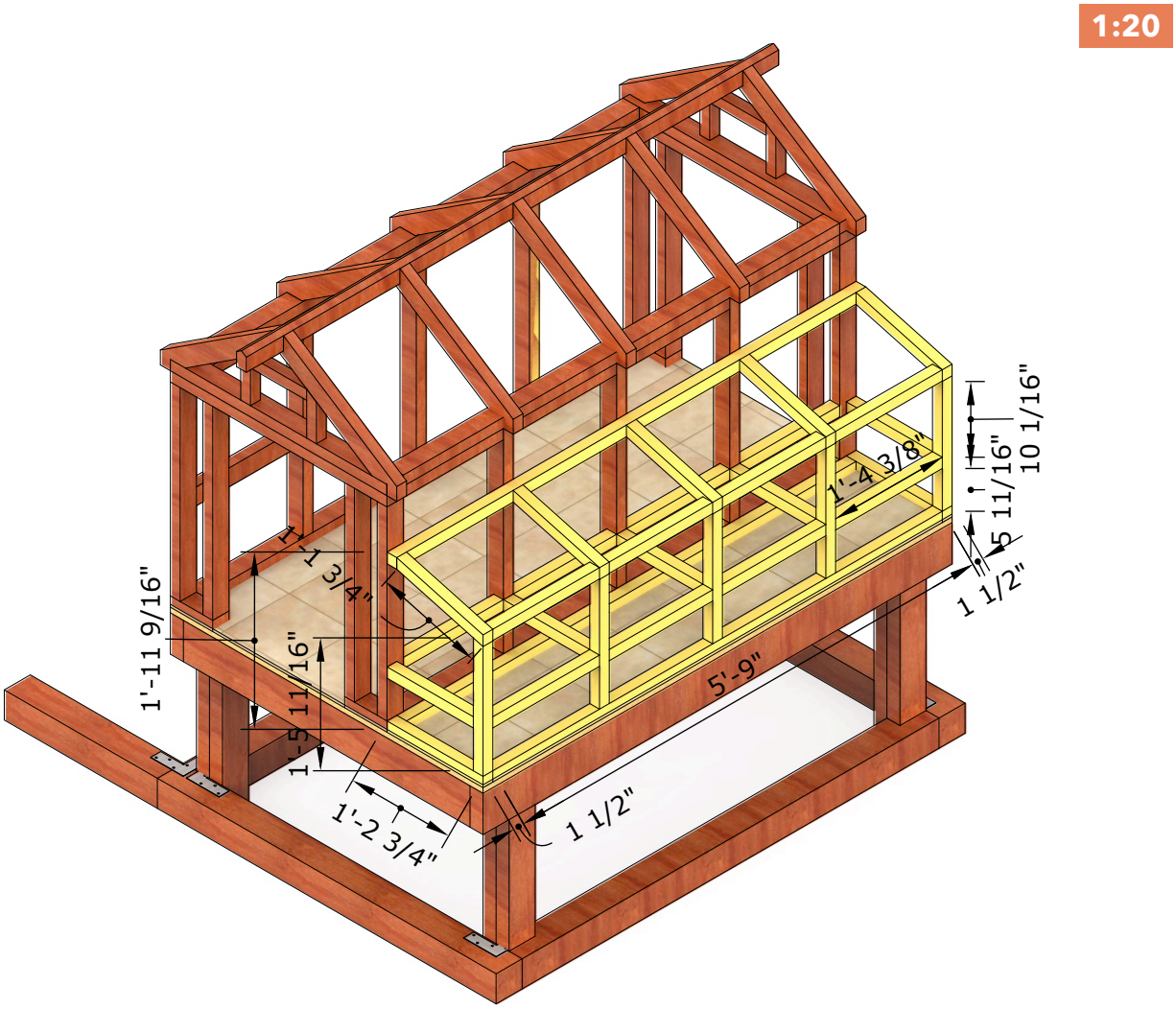

5 NEST BOX DETAILS

Put fiberboard sheet with the size size 3'-0"x1'-1 1/4" on the floor of nest boxes. You will also need trapezium shaped fiberboard with the size of 1'-7/8"x 1'-1 1/4" to separate between nest boxes.

1:18

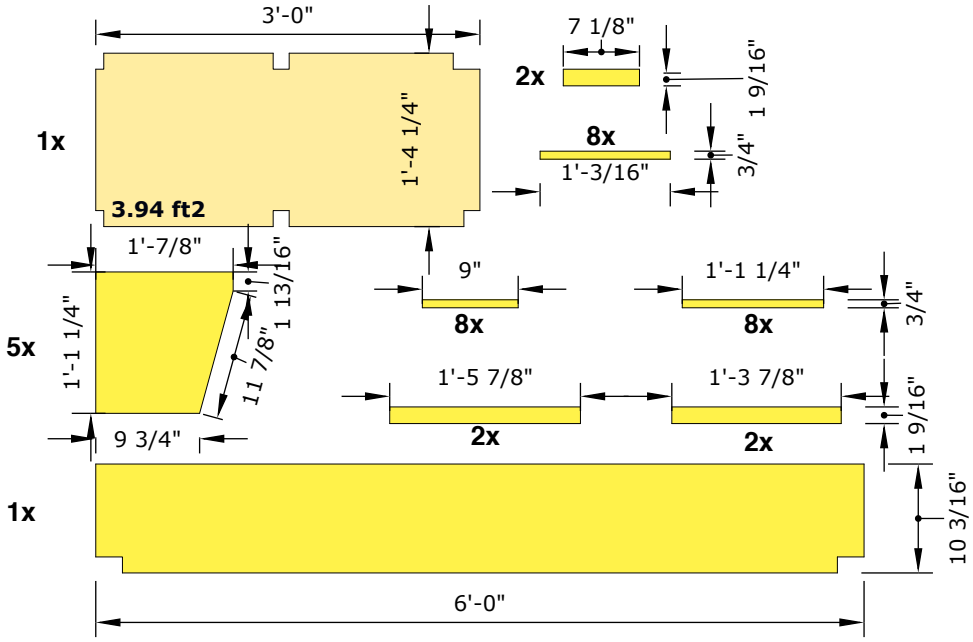

1:24

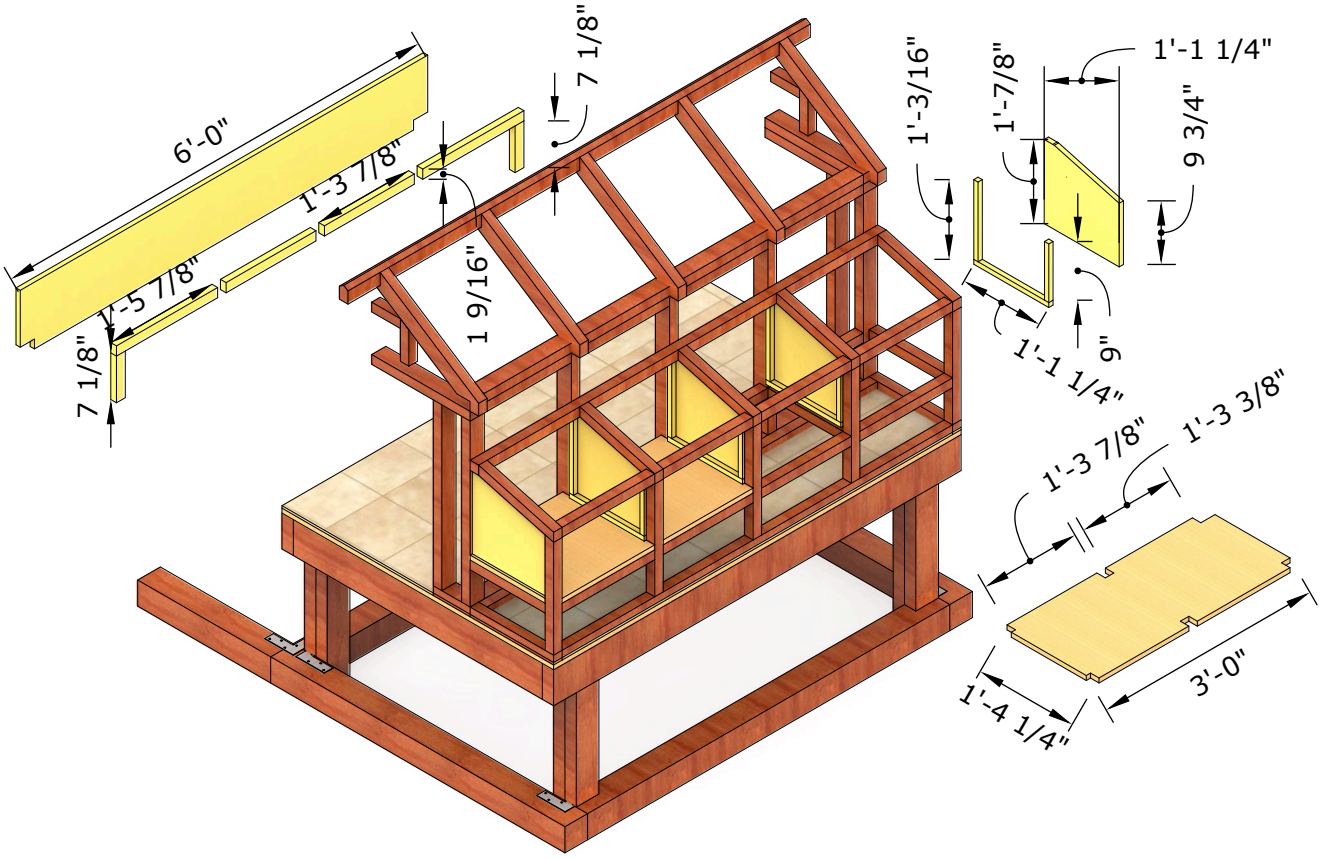

6 SMALL RUN ZONE FRAME

This is the run area below the elevated coop area. Attach 2"x3 1/2" lumbers with nails and create square frames with a total dimension of 4'-0"x 1' 5 1/2". Attach it to the bottom of the coop area.

1:10

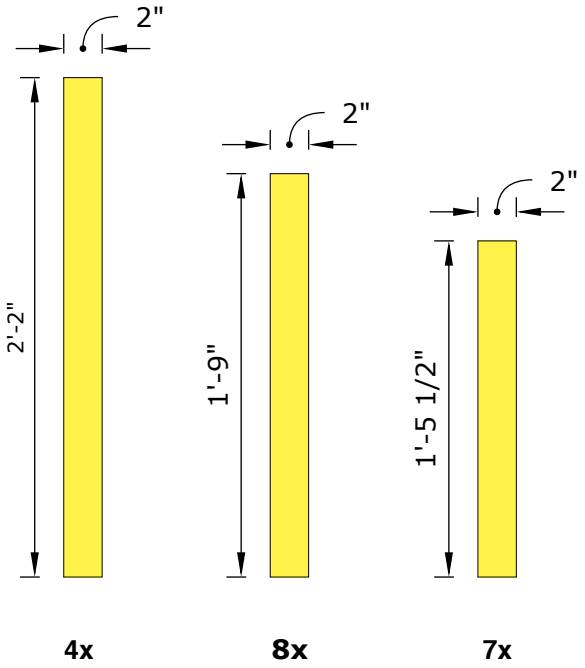

1:24

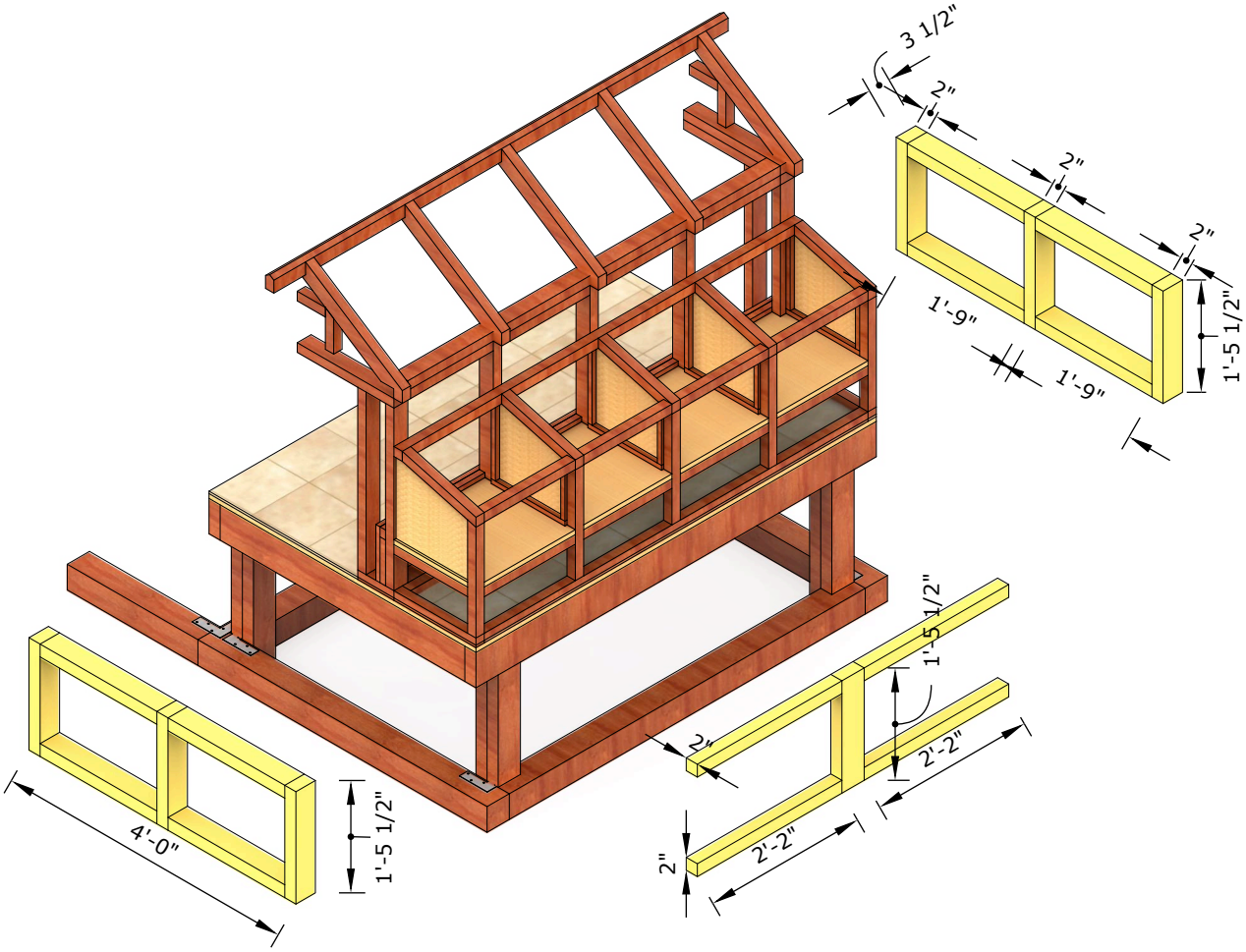

7 SMALL RUN ZONE FENCING

Attach the fencing material on the frame you've created on step 6, then attach smaller frames on the outer side of the fencing to close the seams and make it look nicer.

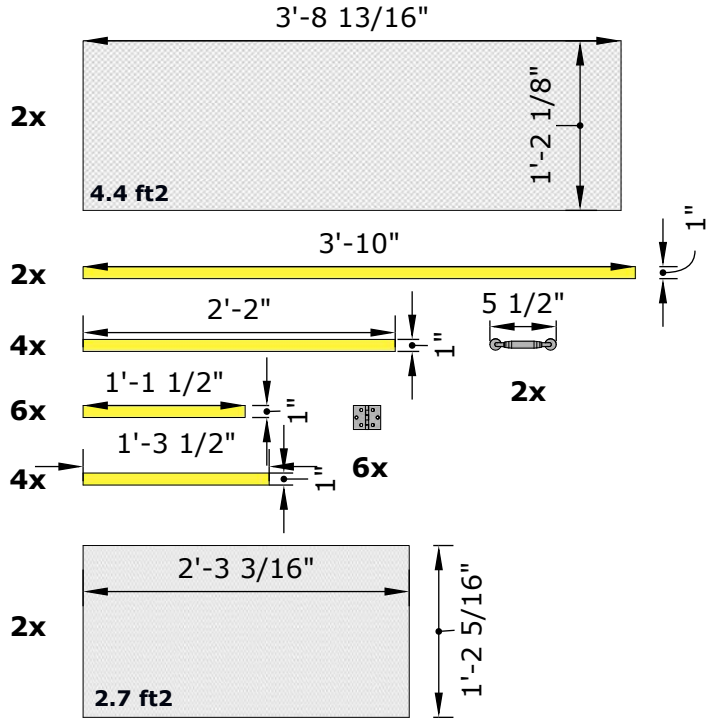

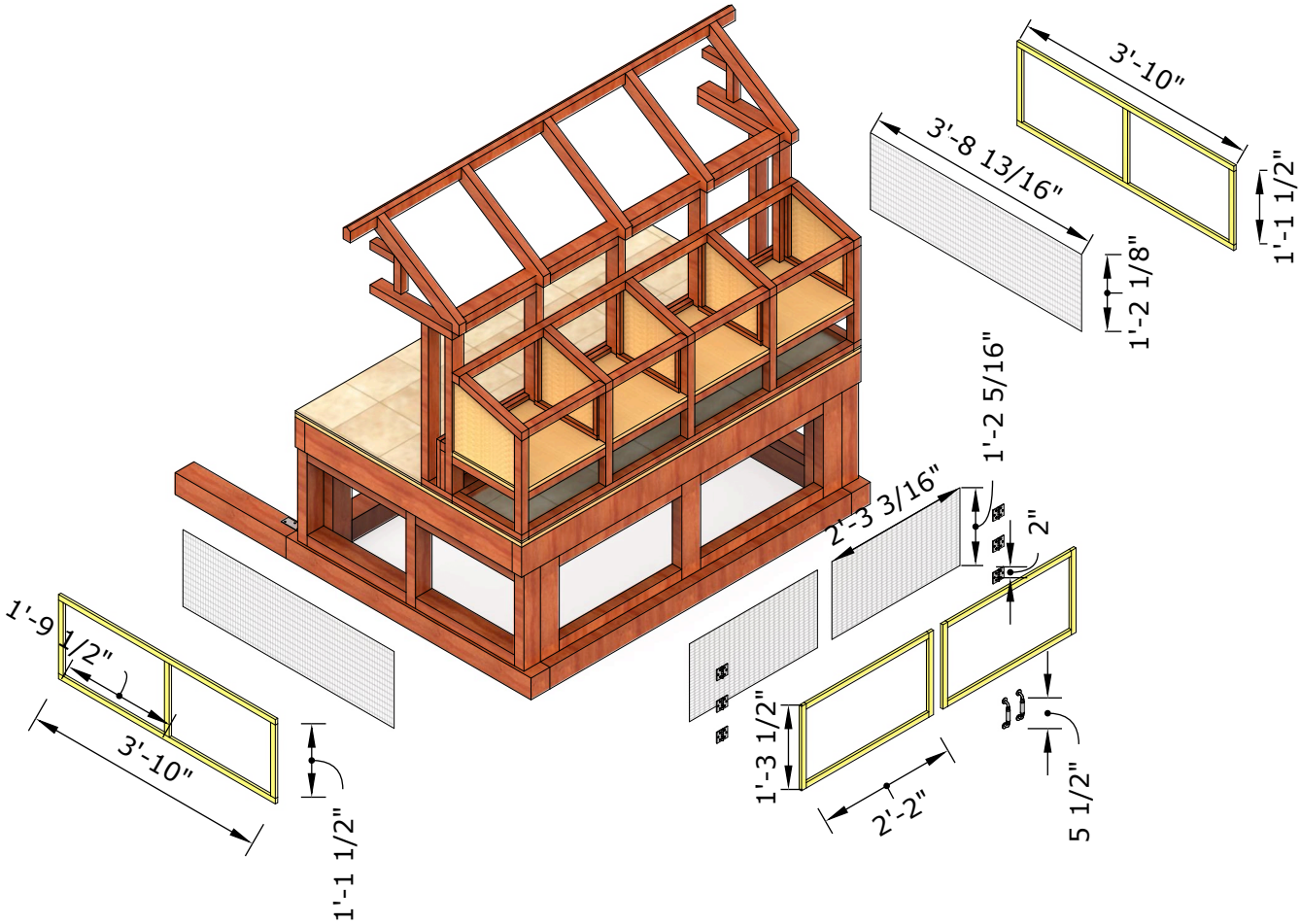

8 ROOST LADDER AND NEST BOX DRAWERS

Create drawers with sheets of fiberboards as pictured below. Then build a ladder-shaped roost where the chickens will sleep. Place the ladder inside the coop.

1:16

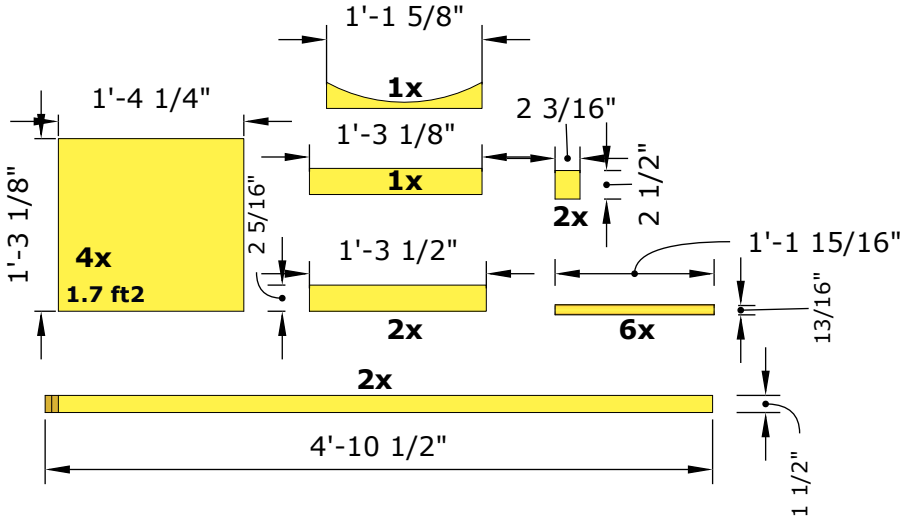

1:28

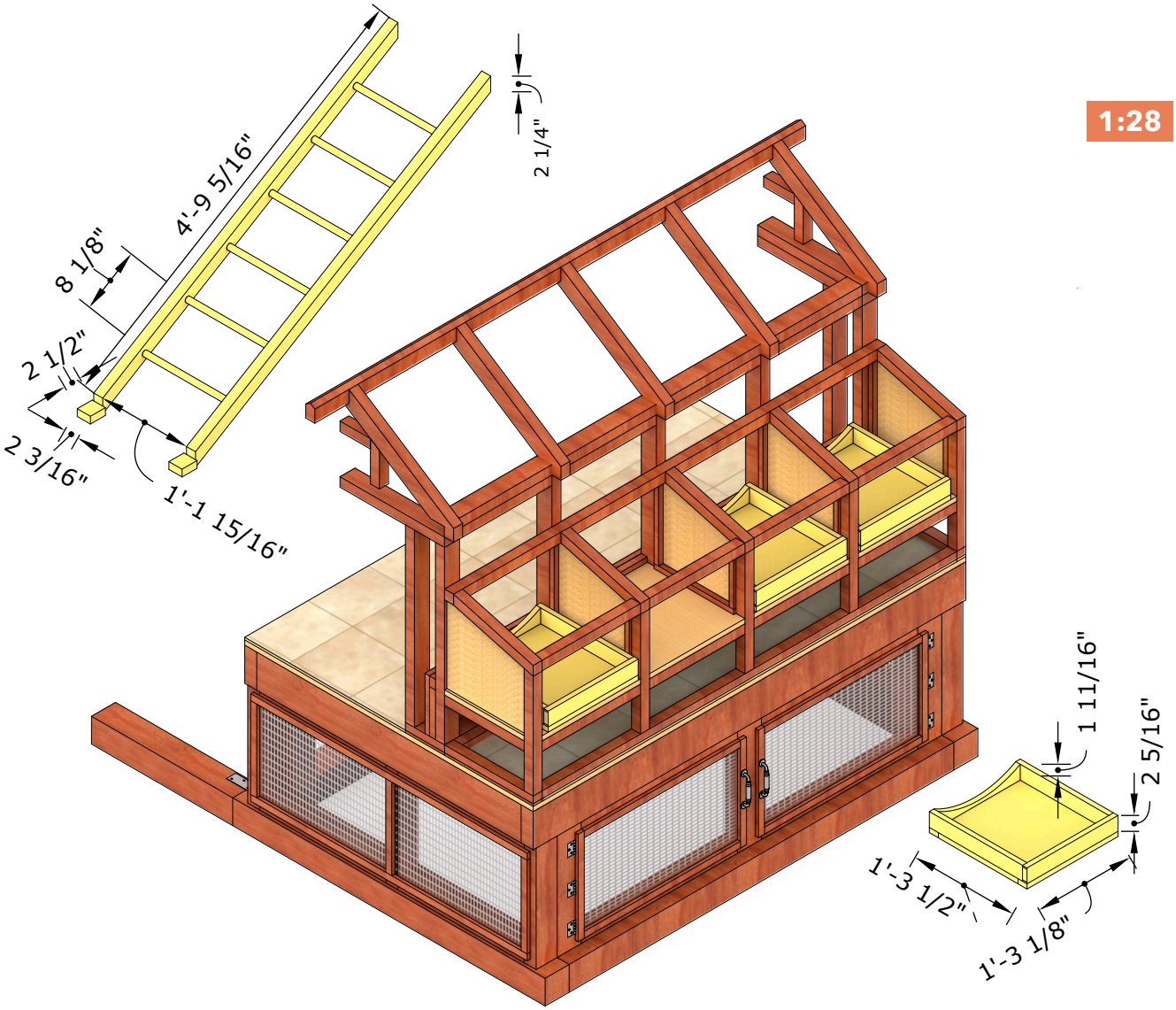

9 COOP WALLS

Here are the dimensions for the wall minus the doors and ventilations:

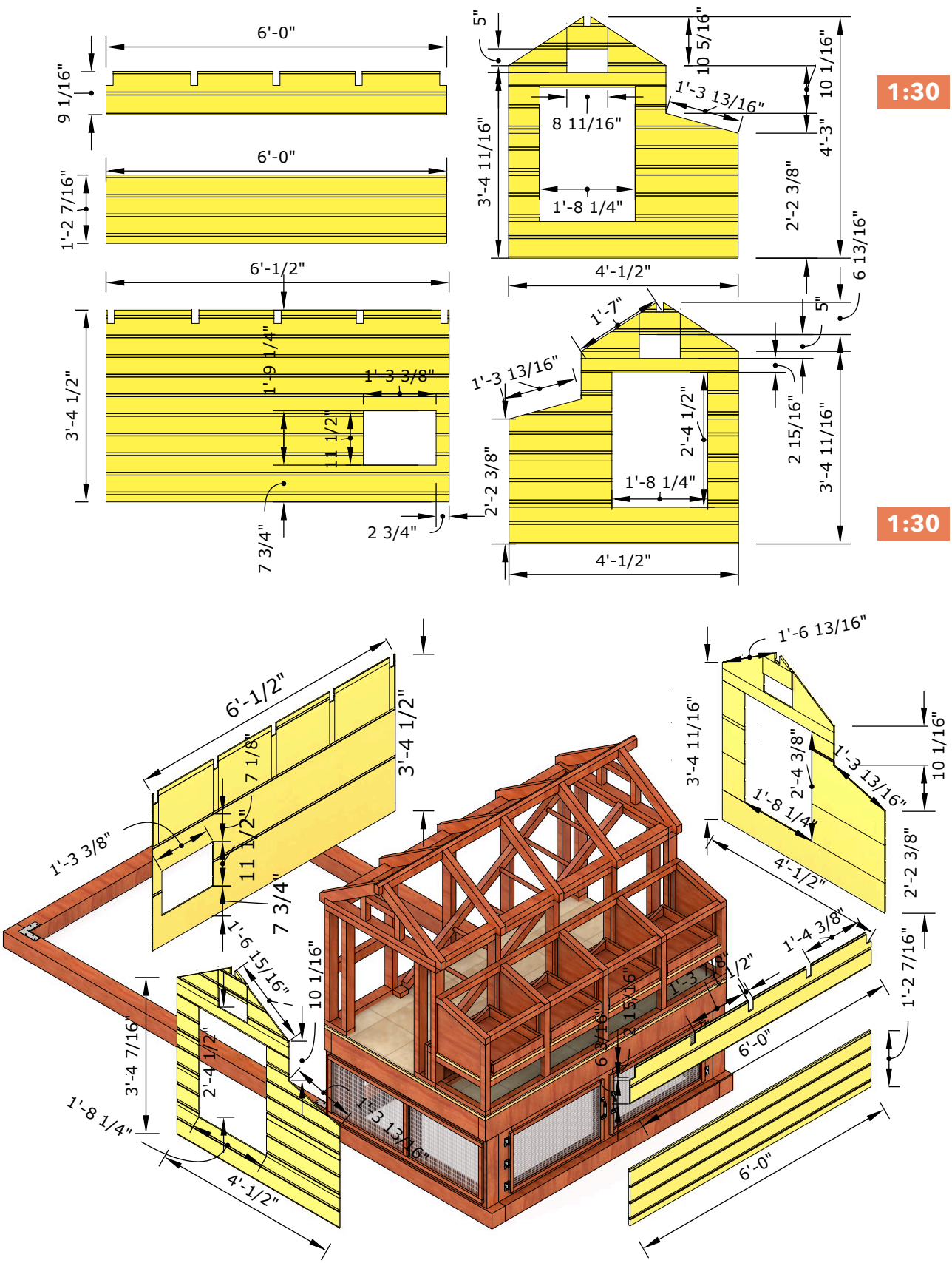

10 COOP WALL EXTERIOR

These are wooden slats attached on the outer side of the walls to make it look cleaner and sturdier.

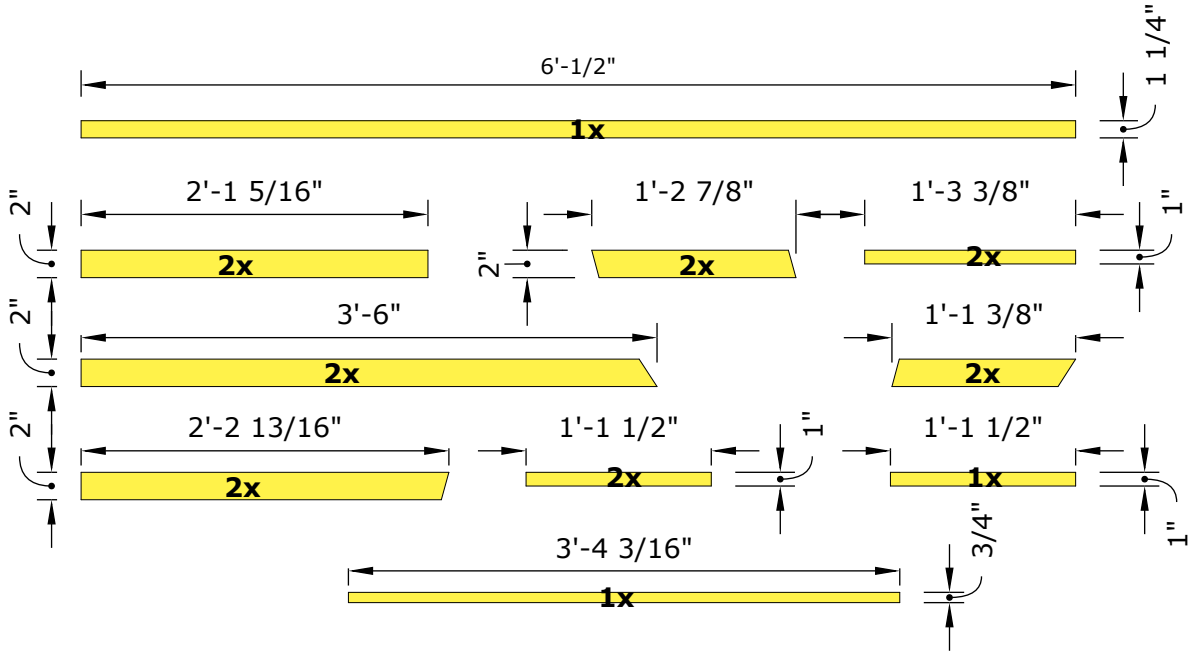

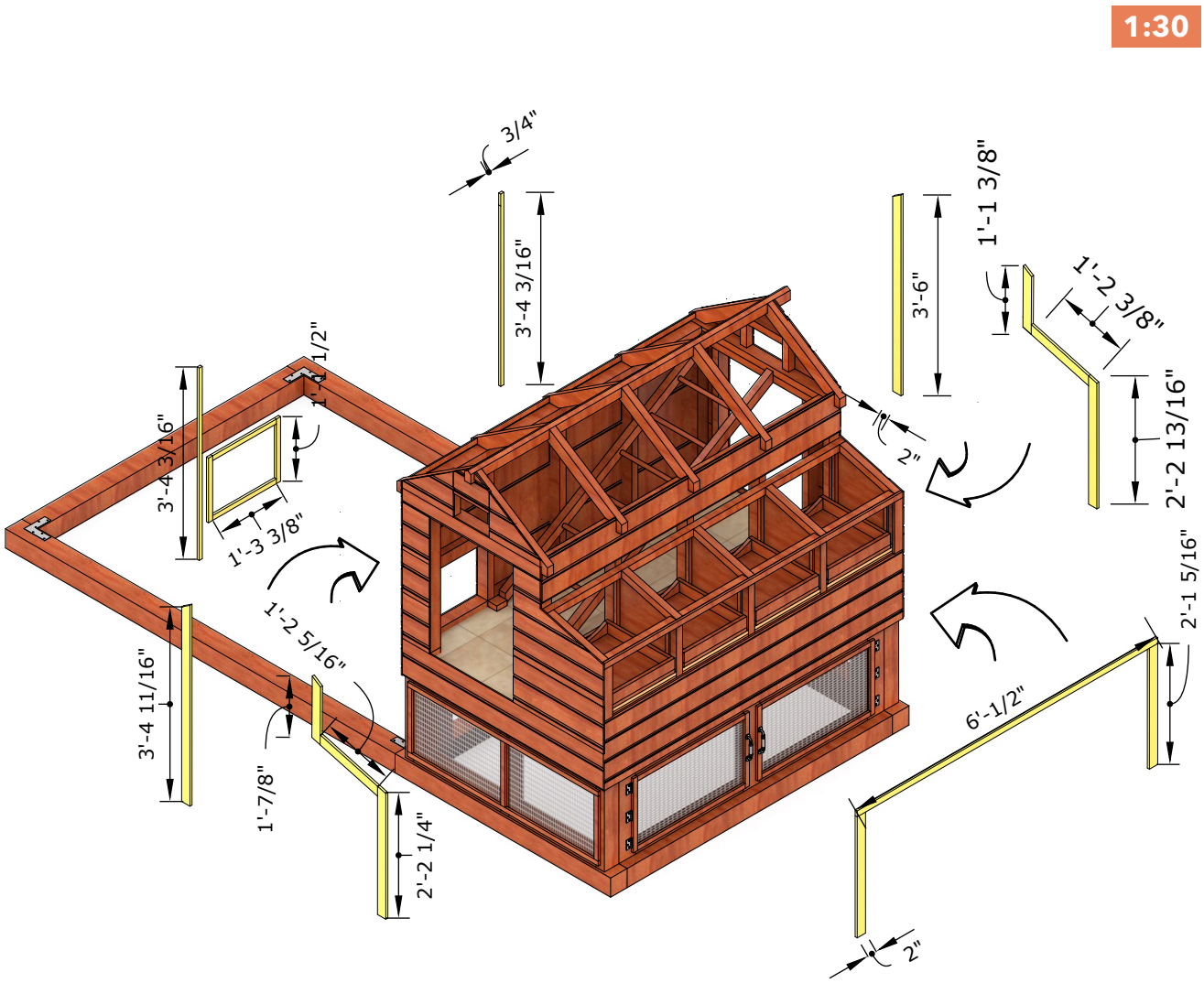

11 NEST BOX DOOR AND ROOF

Create the nest box door and roof by following the diagrams below. Attach the door handles and hinges when you finished.

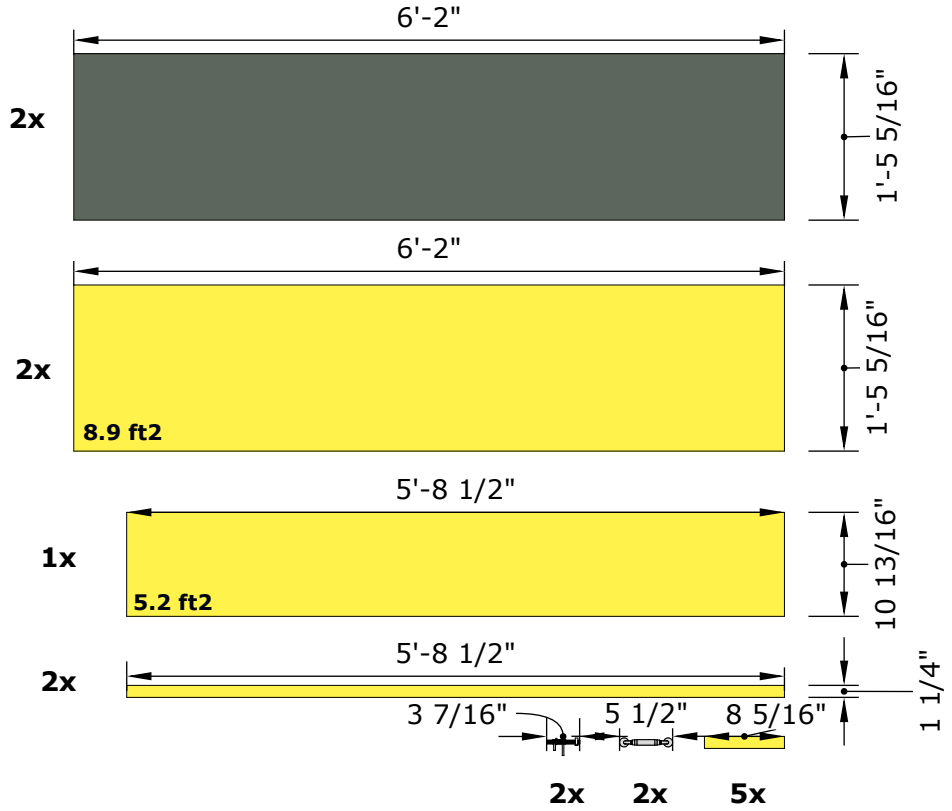

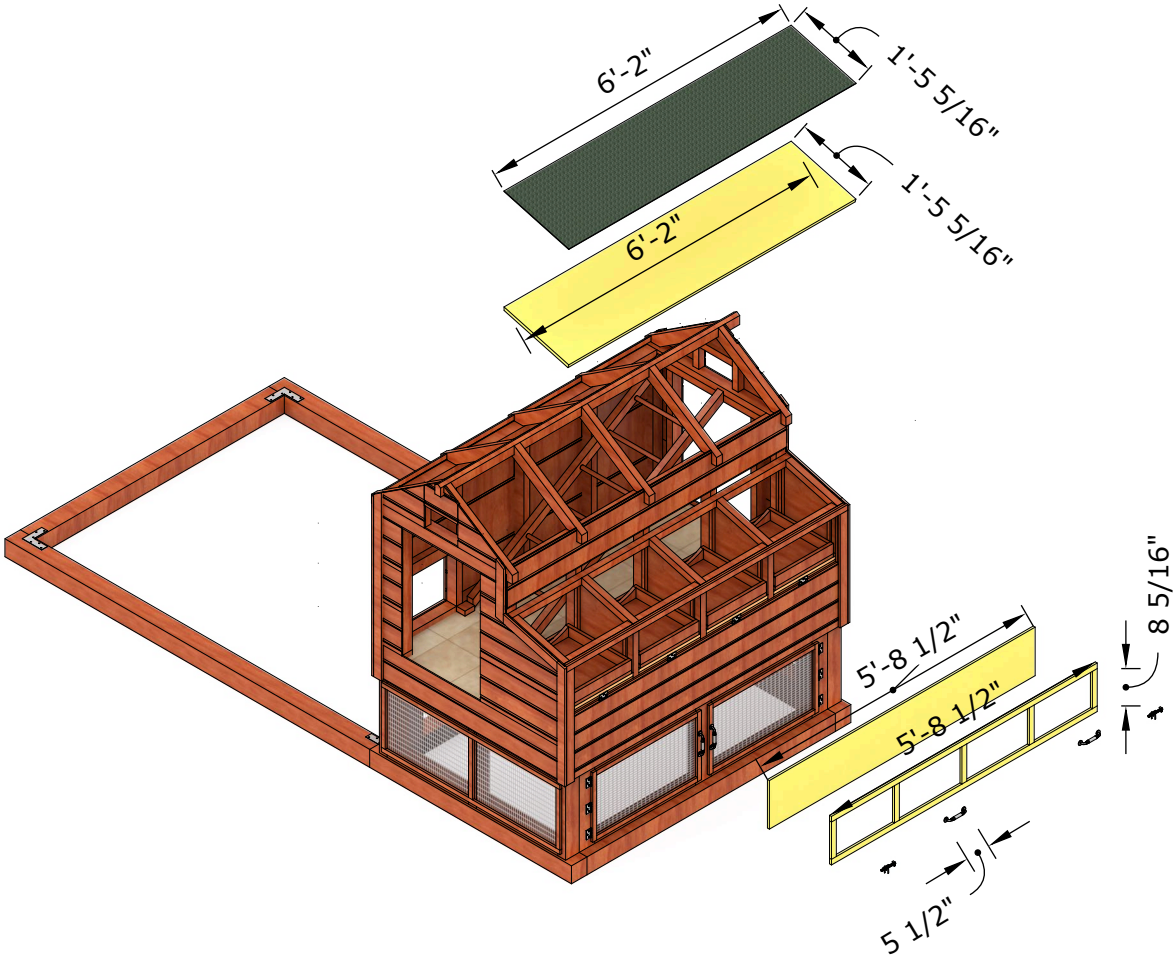

12 COOP DOORS AND VENTILATIONS

There are two doors and ventilations, one for the front and one for the back side of the coop. Both have identical dimensions. The upper half the door can be opened for window/ventilation.

1:12

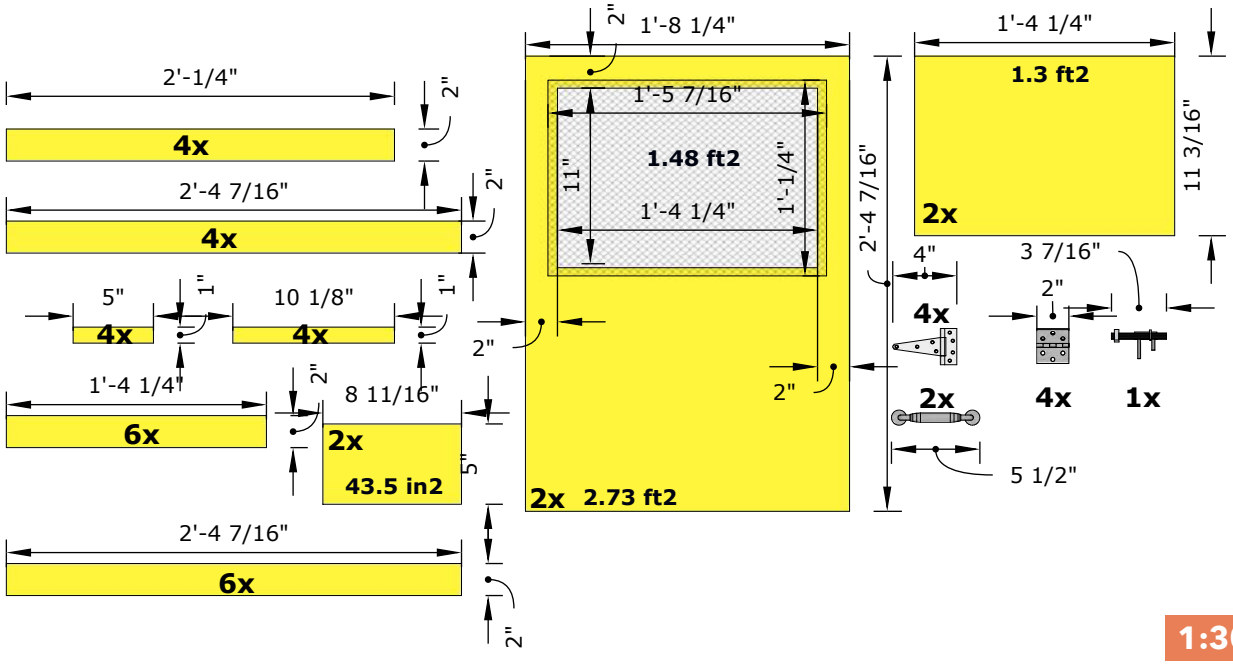

1:30

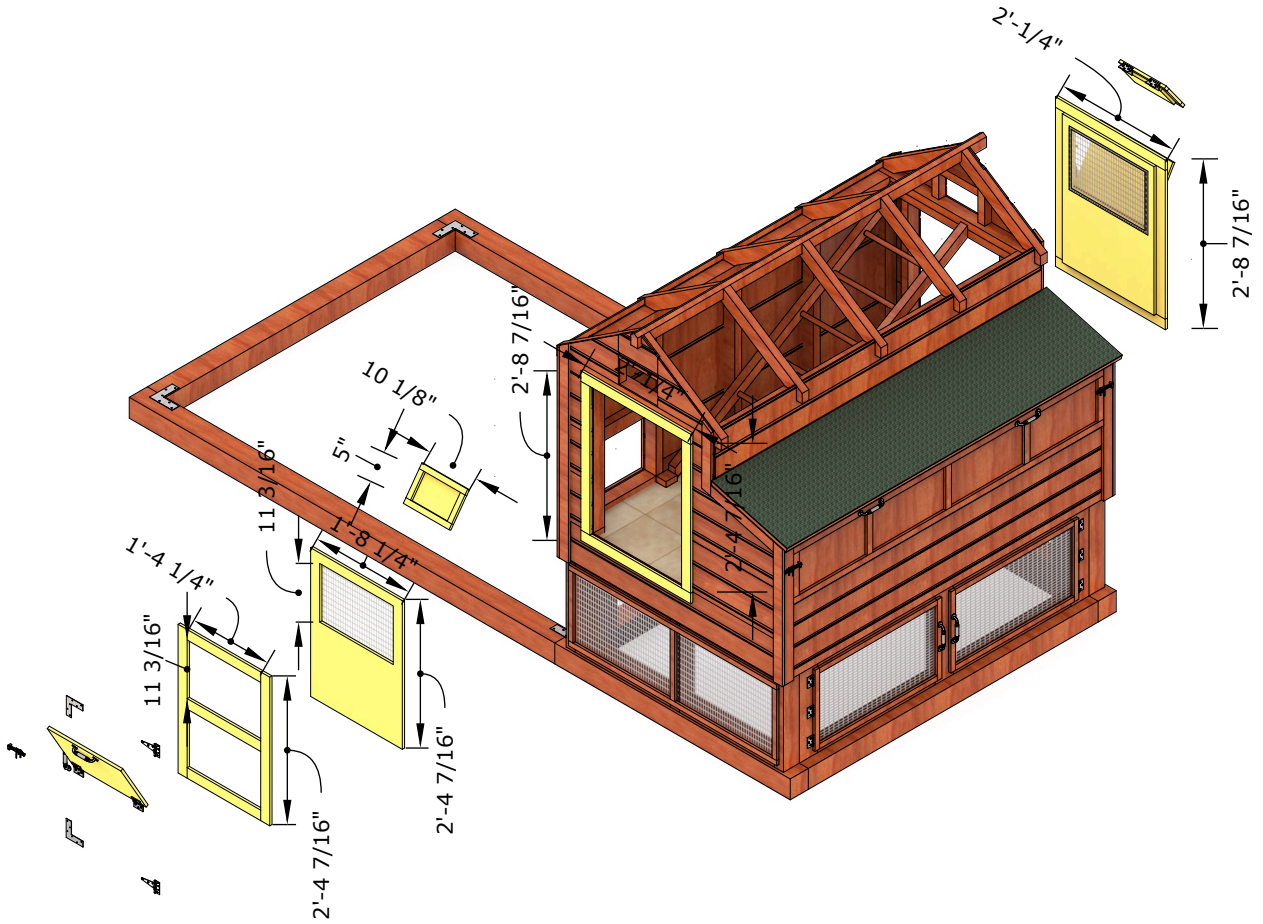

13 ROOF STRUCTURE

Attach fiberboard sheet with a thickness of 3/4 to the top of the coop frame and put the roof shingles on top of it.

1:24

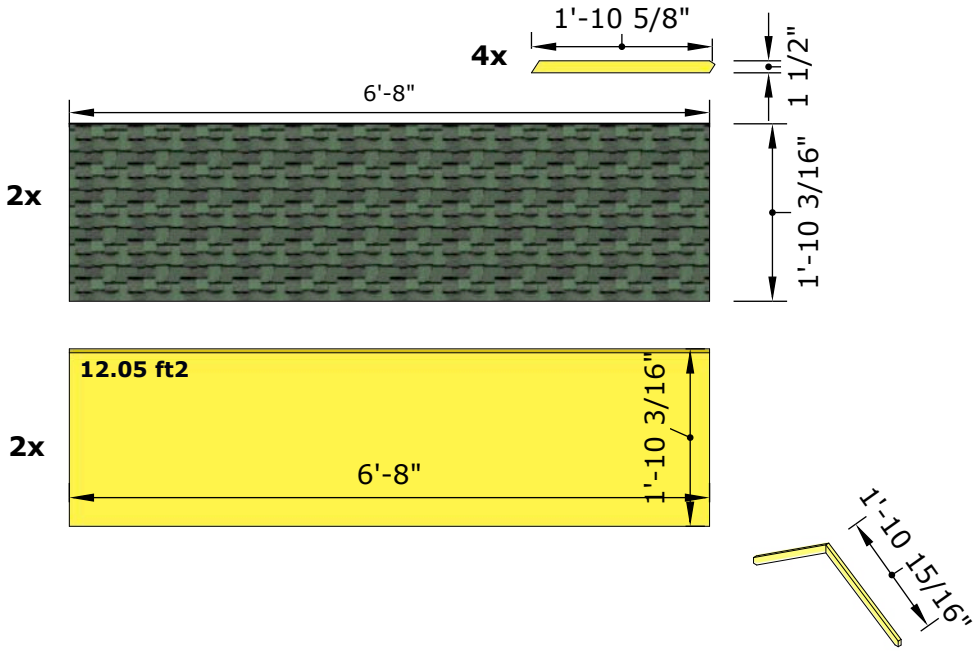

1:35

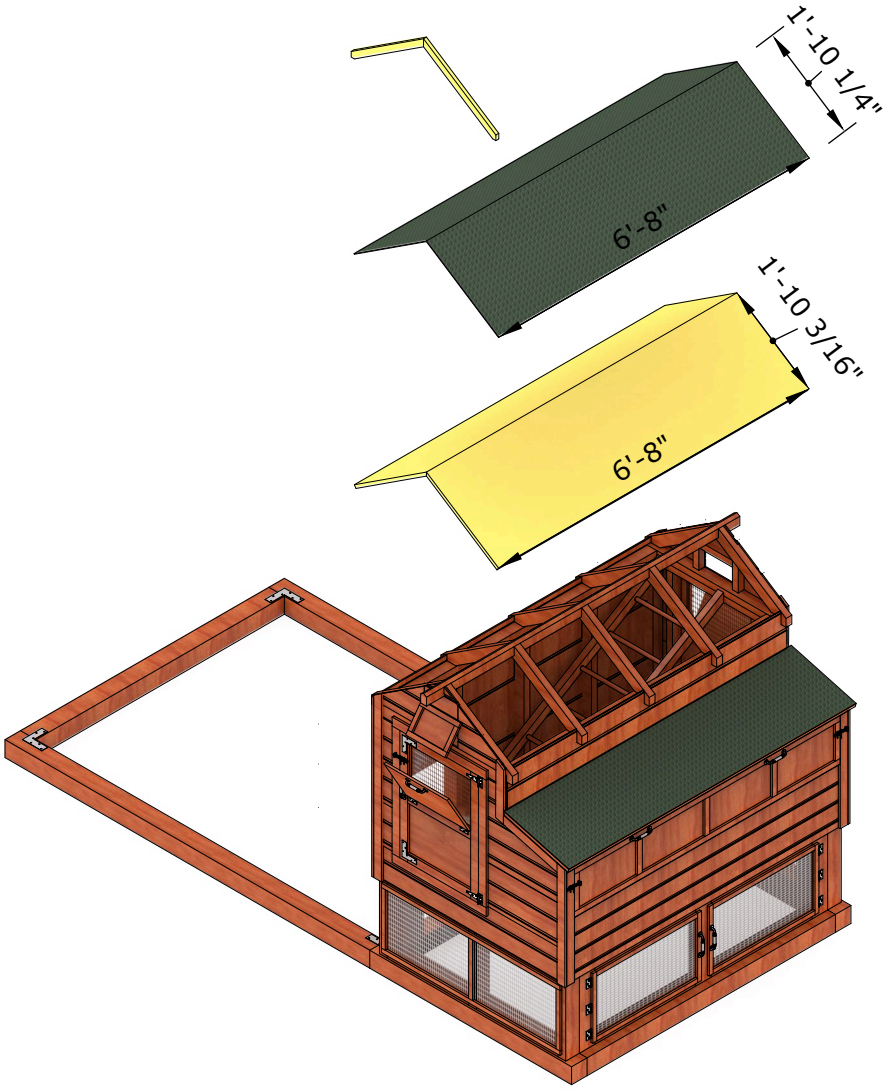

14 RUN ZONE STRUCTURE

Create the frame of the run zone with 4"x2" lumbers, the lengths are specified in the drawing below. Attach them together nails or screws.

1:24

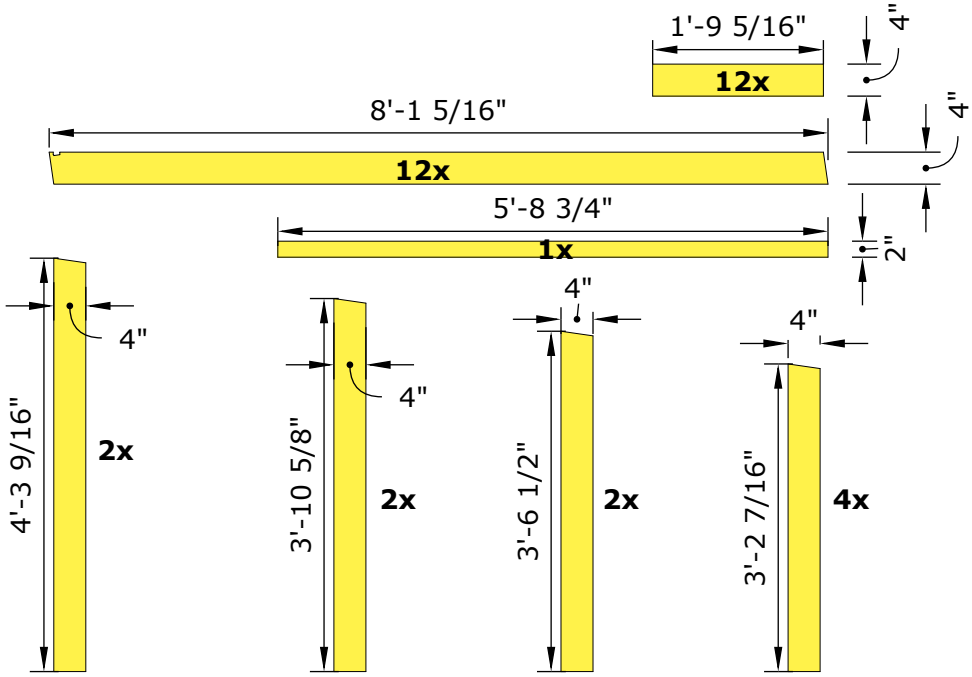

1:28

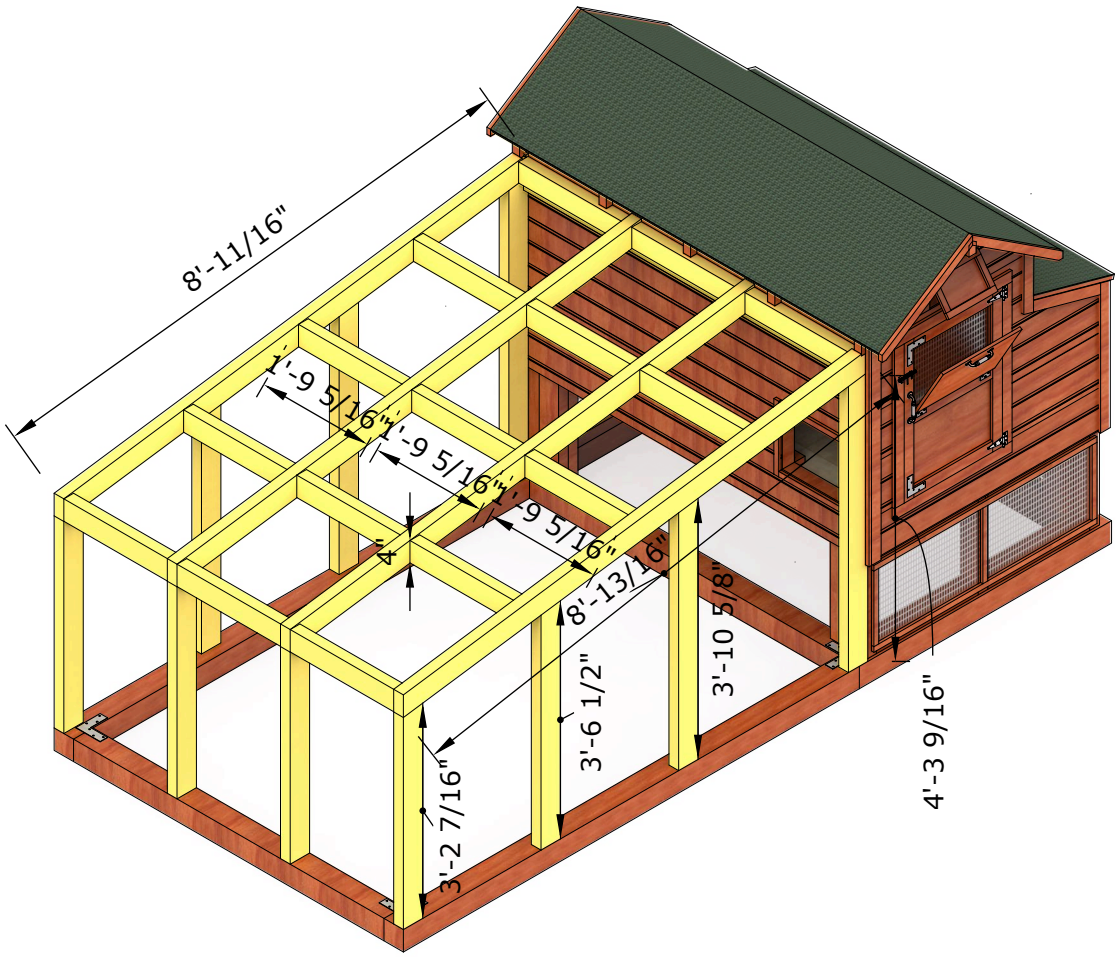

15 CHICKEN DOOR AND LADDER

Attach 10 pieces of 1'-1 5/16"x1 1/4"x1 1/4" to a board with the length of 5'-3 7/8". The door consists of two L-shaped horizontal bars as pictured below, allowing the plywood to slide.

1:14

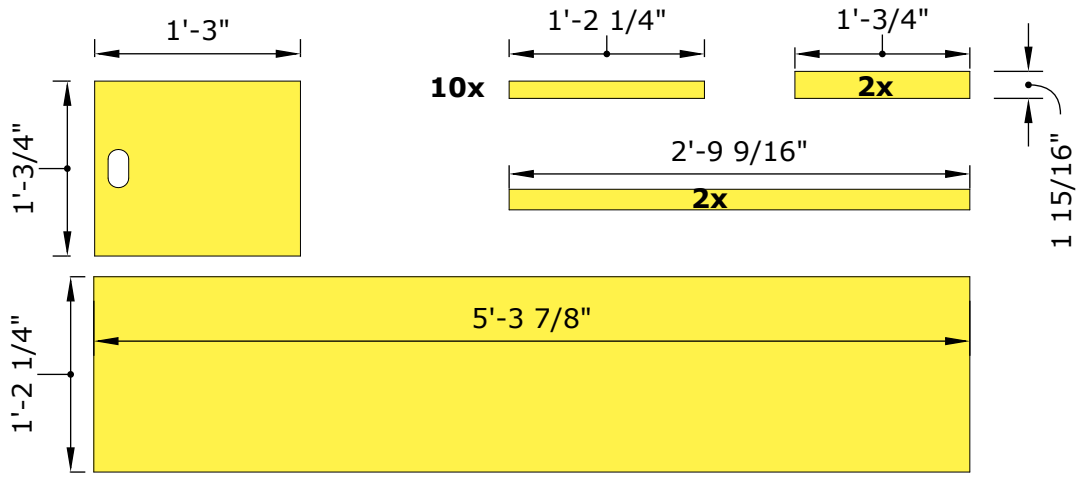

1:28

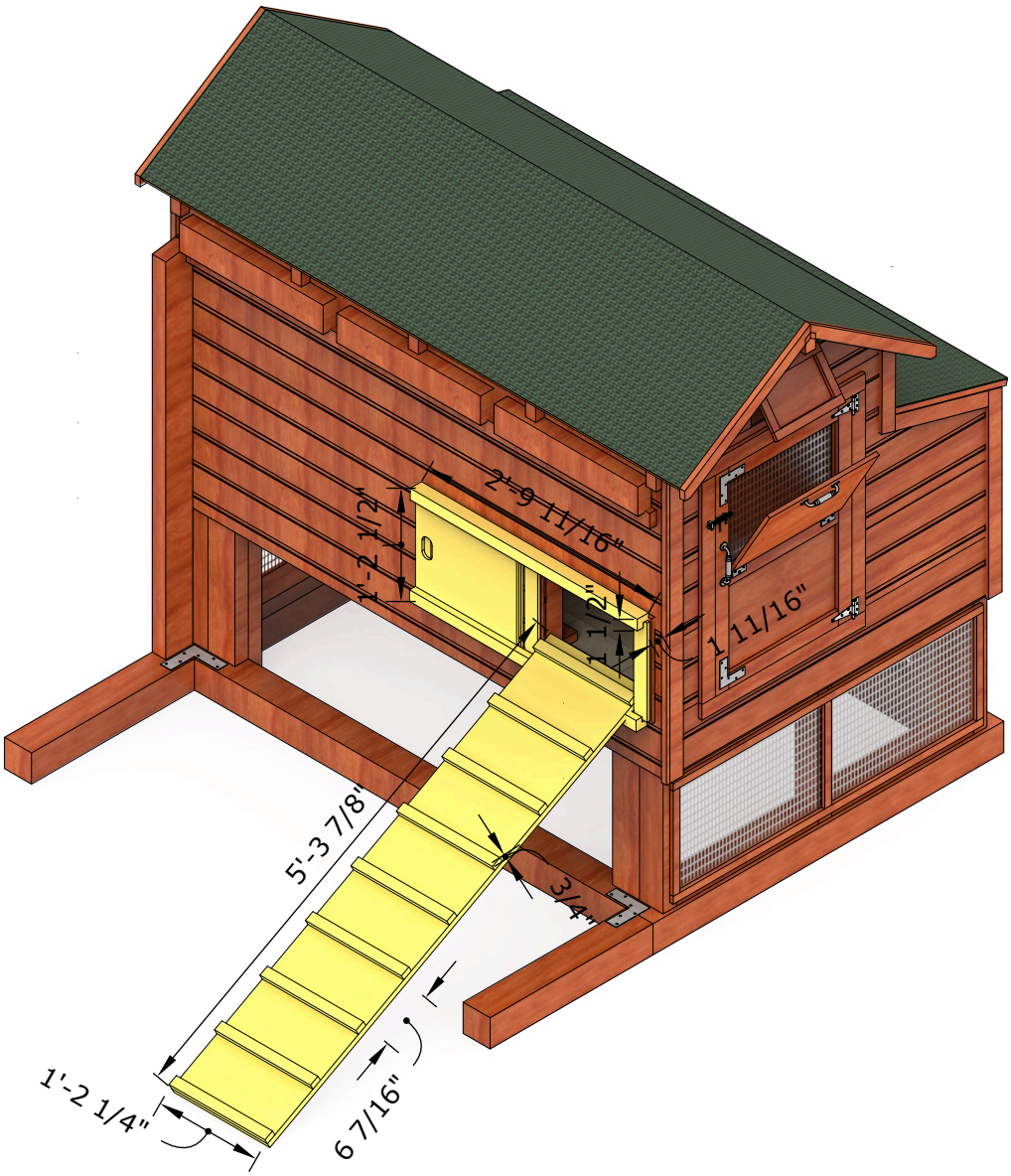

16 RUN ZONE FENCING AND DOORS

Nail mesh on the outside of the run frame for fencing. Then attach 1"x1/2" lumbers to the run frame, outside of the fencing to close the seams. Finally, build and attach the doors as pictured below.

1:42

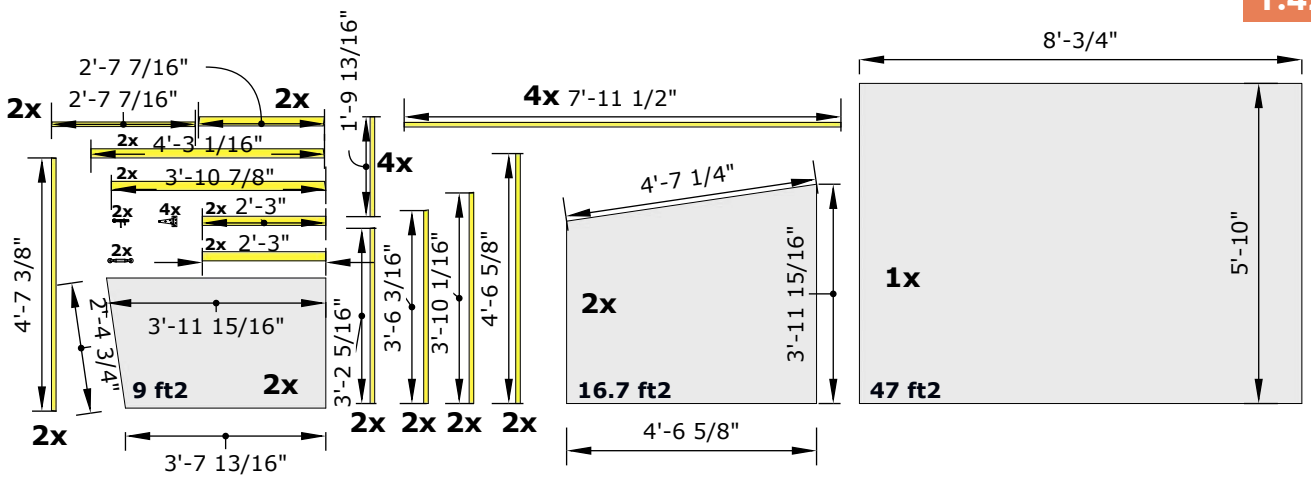
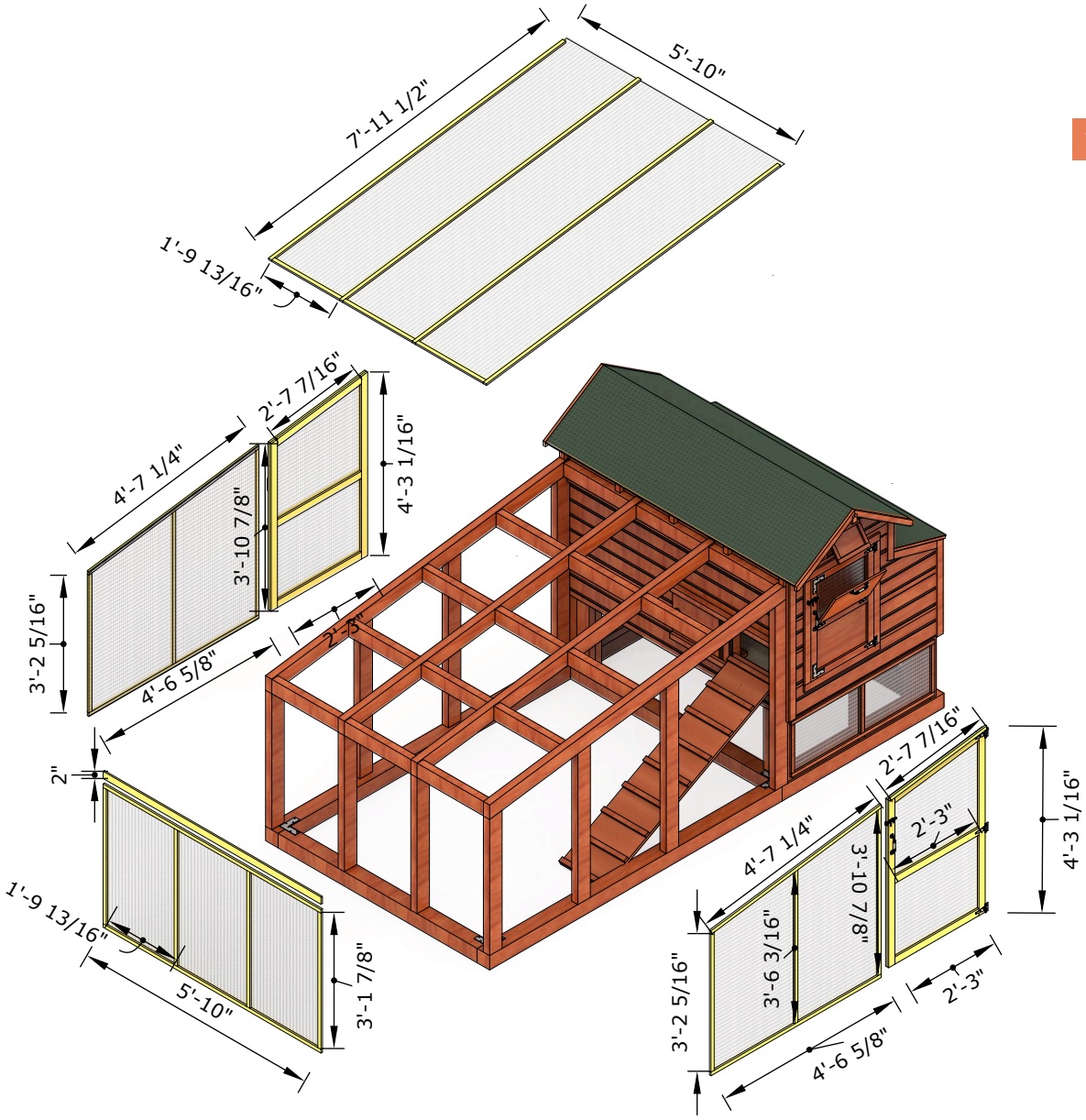
1:40